MAC223A6, MAC223A8, MAC223A10

Preferred Device

Triacs

Silicon Bidirectional Thyristors

Designed primarily for full-wave ac control applications such as lighting systems, heater controls, motor controls and power supplies; or wherever full–wave silicon–gate–controlled devices are needed.

- Off–State Voltages to 800 Volts
- All Diffused and Glass Passivated Junctions for Parameter Uniformity and Stability
- Small, Rugged, Thermowatt Construction for Thermal Resistance and High Heat Dissipation
- Gate Triggering Guaranteed in Four Modes
- Device Marking: Logo, Device Type, e.g., MAC223A6, Date Code

MAXIMUM RATINGS (T_J = 25°C unless otherwise noted)

Rating	Symbol	Value	Unit
Peak Repetitive Off–State Voltage(1) (T_J = –40 to 125°C, Sine Wave 50 to 60 Hz, Gate Open)	V_{DRM}, V_{RRM}		Volts
MAC223A6		400	
MAC223A8		600	
MAC223A10		800	
On–State Current RMS Full Cycle Sine Wave 50 to 60 Hz (T_C = 80°C)	$I_{T(RMS)}$	25	A
Peak Non–repetitive Surge Current (One Full Cycle, 60 Hz, T_C = 80°C) Preceded and followed by rated current	I_{TSM}	250	A
Circuit Fusing (t = 8.3 ms)	I^2t	260	A^2s
Peak Gate Current (t ≤ 2.0 µsec; T_C = +80°C)	I_{GM}	2.0	A
Peak Gate Voltage (t ≤ 2.0 µsec; T_C = +80°C)	V_{GM}	±10	Volts
Peak Gate Power (t ≤ 2.0 µsec; T_C = +80°C)	P_{GM}	20	Watts
Average Gate Power (T_C = 80°C, t = 8.3 ms)	$P_{G(AV)}$	0.5	Watts
Operating Junction Temperature Range	T_J	–40 to 125	°C
Storage Temperature Range	T_{stg}	–40 to 150	°C
Mounting Torque	—	8.0	in. lb.

(1) V_{DRM} and V_{RRM} for all types can be applied on a continuous basis. Blocking voltages shall not be tested with a constant current source such that the voltage ratings of the devices are exceeded.

ON Semiconductor

http://onsemi.com

TRIACS
25 AMPERES RMS
400 thru 800 VOLTS

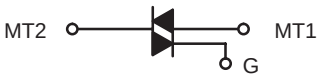

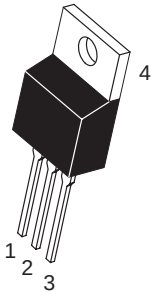

TO–220AB
CASE 221A
STYLE 4

PIN ASSIGNMENT	
1	Main Terminal 1
2	Main Terminal 2
3	Gate
4	Main Terminal 2

ORDERING INFORMATION

Device	Package	Shipping
MAC223A6	TO220AB	500/Box
MAC223A8	TO220AB	500/Box
MAC223A10	TO220AB	500/Box

Preferred devices are recommended choices for future use and best overall value.

© Semiconductor Components Industries, LLC, 1999

February, 2000 – Rev. 1

Publication Order Number:
MAC223A/D

THERMAL CHARACTERISTICS

Characteristic	Symbol	Value	Unit
Thermal Resistance, Junction to Case	$R_{\theta JC}$	1.2	°C/W
Thermal Resistance, Junction to Ambient	$R_{\theta JA}$	60	°C/W
Maximum Lead Temperature for Soldering Purposes 1/8″ from Case for 10 Seconds	T_L	260	°C

ELECTRICAL CHARACTERISTICS (T_C = 25°C unless otherwise indicated; Electricals apply in both directions)

Characteristic		Symbol	Min	Typ	Max	Unit
OFF CHARACTERISTICS						
Peak Repetitive Blocking Current (V_D = Rated V_{DRM}, V_{RRM}; Gate Open)	T_J = 25°C T_J = 125°C	I_{DRM}, I_{RRM}	— —	— —	10 2.0	μA mA
ON CHARACTERISTICS						
Peak On–State Voltage (I_{TM} = ±35 A Peak, Pulse Width ≤ 2 ms, Duty Cycle ≤ 2%)		V_{TM}	—	1.4	1.85	Volts
Gate Trigger Current (Continuous dc) (V_D = 12 V, R_L = 100 Ω) MT2(+), G(+); MT2(–), G(–); MT(+), G(–) MT2(–), G(+)		I_{GT}	 — —	 20 30	 50 75	mA
Gate Trigger Voltage (Continuous dc) (V_D = 12 V, R_L = 100 Ω) MT2(+), G(+); MT2(–), G(–); MT(+), G(–) MT2(–), G(+)		V_{GT}	 — —	 1.1 1.3	 2.0 2.5	Volts
Gate Non–trigger Voltage (V_D = 12 V, T_J = 125°C, R_L = 100 Ω) All Quadrants		V_{GD}	0.2	0.4	—	Volts
Holding Current (V_D = 12 Vdc, Gate Open, Initiating Current = ±200 mA)		I_H	—	10	50	mA
Turn–On Time (V_D = Rated V_{DRM}, I_{TM} = 35 A Peak, I_G = 200 mA)		t_{gt}	—	1.5	—	μs
DYNAMIC CHARACTERISTICS						
Critical Rate of Rise of Off-State Voltage (V_D = Rated V_{DRM}, Exponential Waveform, T_C = 125°C)		dv/dt	—	40	—	V/μs
Critical Rate of Rise of Commutation Voltage (V_D = Rated V_{DRM}, I_{TM} = 35 A Peak, Commutating di/dt = 12.6 A/ms, Gate Unenergized, T_C = 80°C)		dv/dt(c)	—	5.0	—	V/μs

Voltage Current Characteristic of Triacs (Bidirectional Device)

Symbol	Parameter
V_{DRM}	Peak Repetitive Forward Off State Voltage
I_{DRM}	Peak Forward Blocking Current
V_{RRM}	Peak Repetitive Reverse Off State Voltage
I_{RRM}	Peak Reverse Blocking Current
V_{TM}	Maximum On State Voltage
I_H	Holding Current

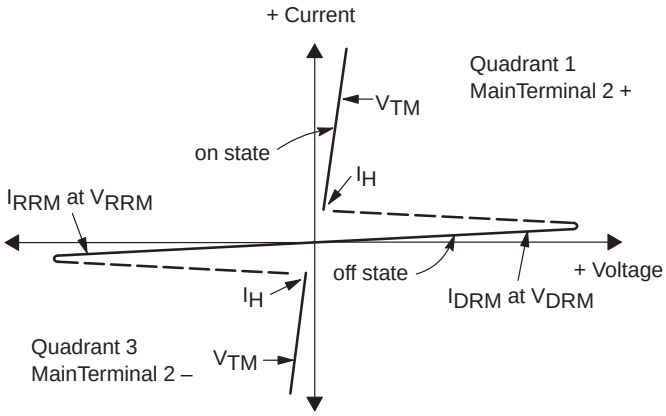

Quadrant Definitions for a Triac

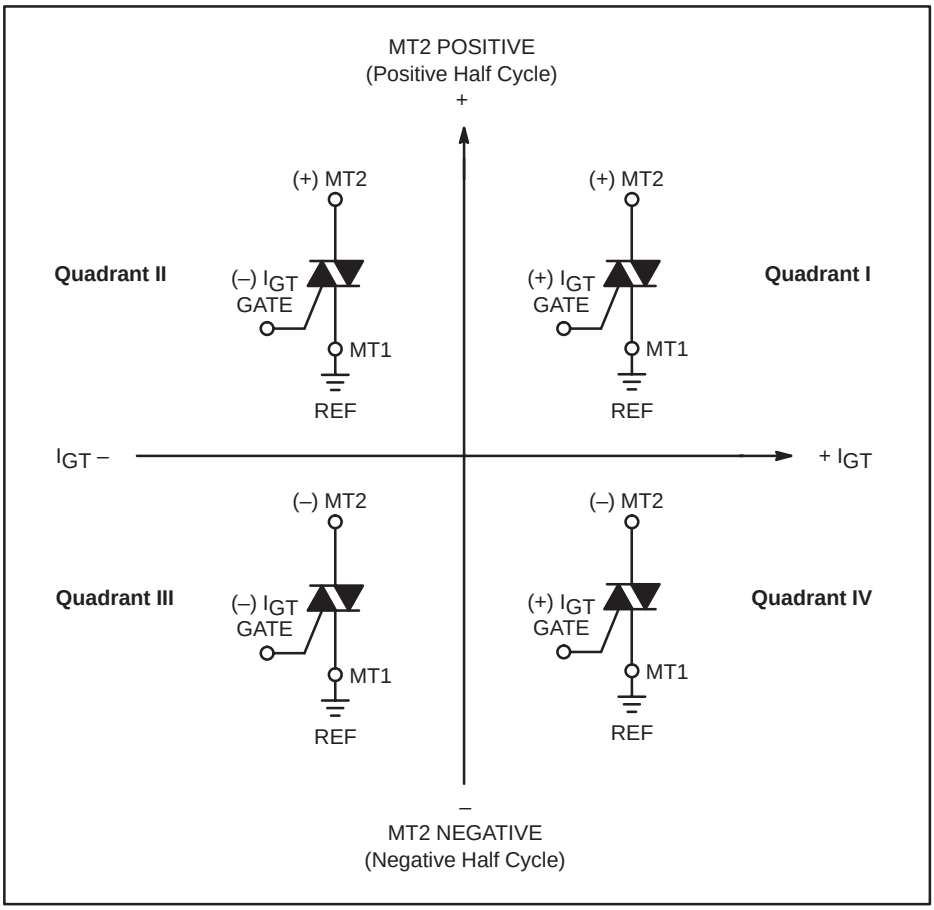

All polarities are referenced to MT1.
With in–phase signals (using standard AC lines) quadrants I and III are used.

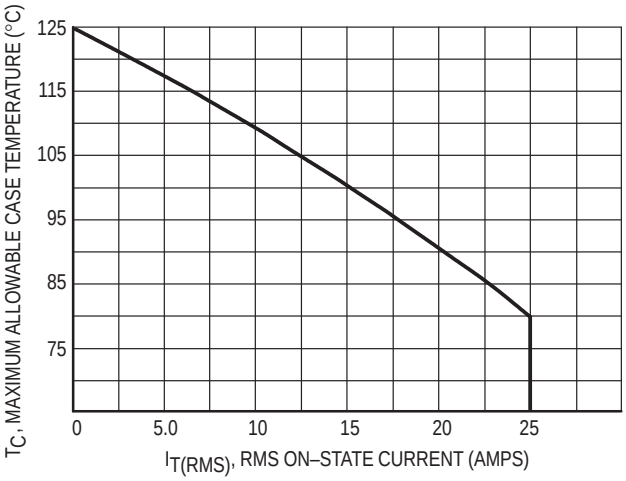

Figure 1. RMS Current Derating

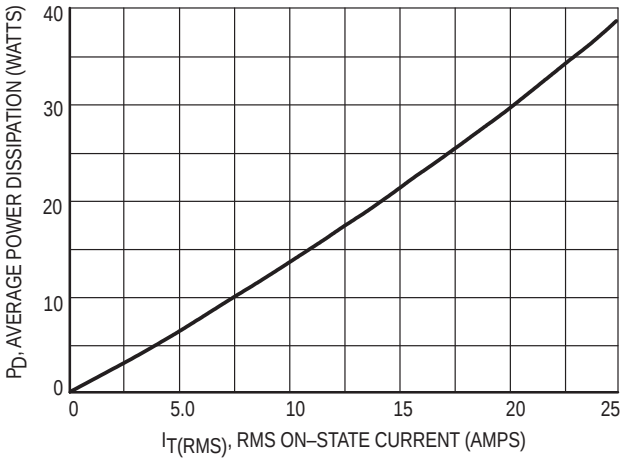

Figure 2. On–State Power Dissipation

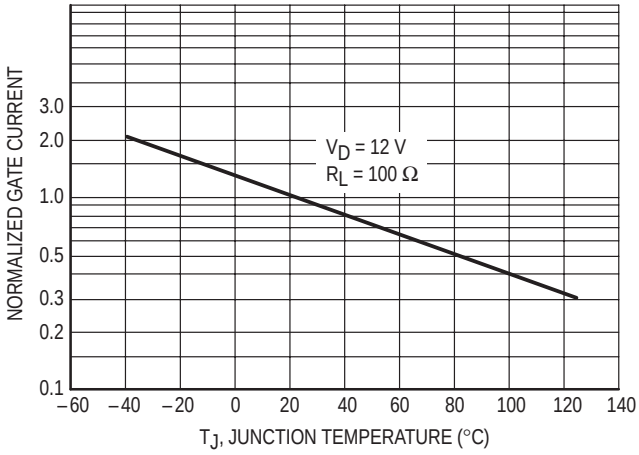

Figure 3. Typical Gate Trigger Current

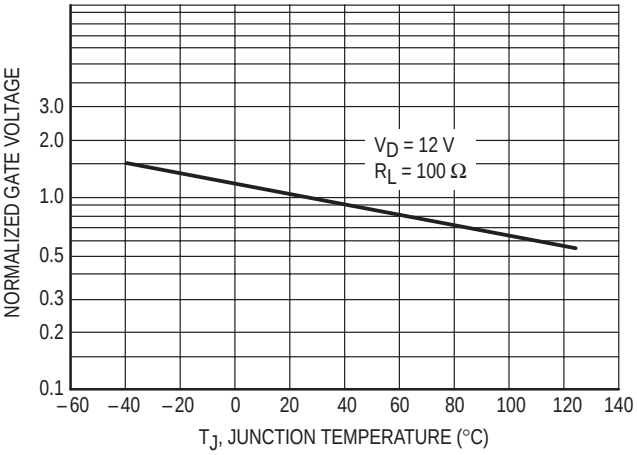

Figure 4. Typical Gate Trigger Voltage

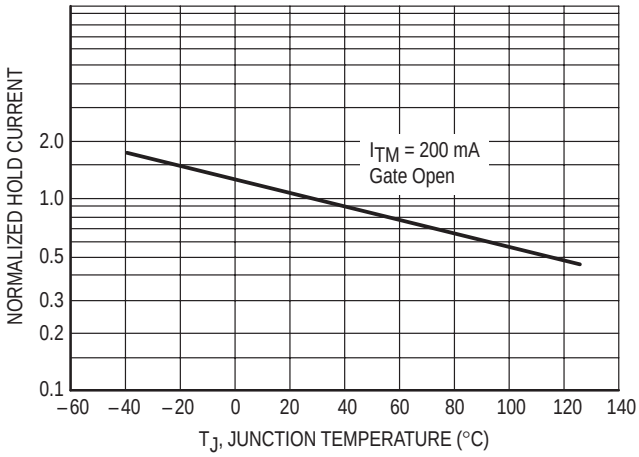

Figure 5. Typical Hold Current

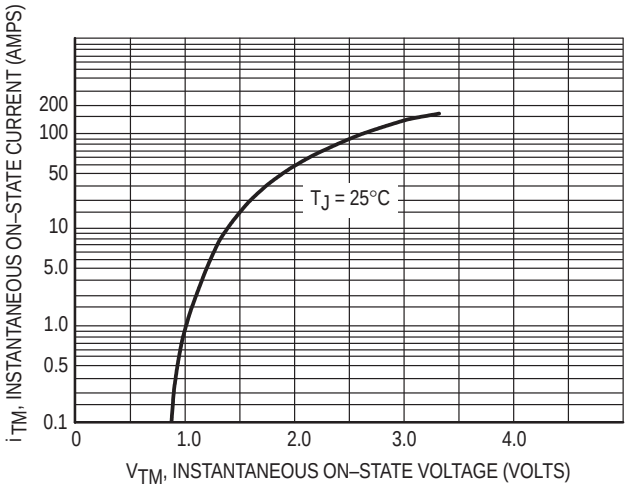

Figure 6. Typical On–State Characteristics

PACKAGE DIMENSIONS

TO–220AB
CASE 221A–07
ISSUE Z

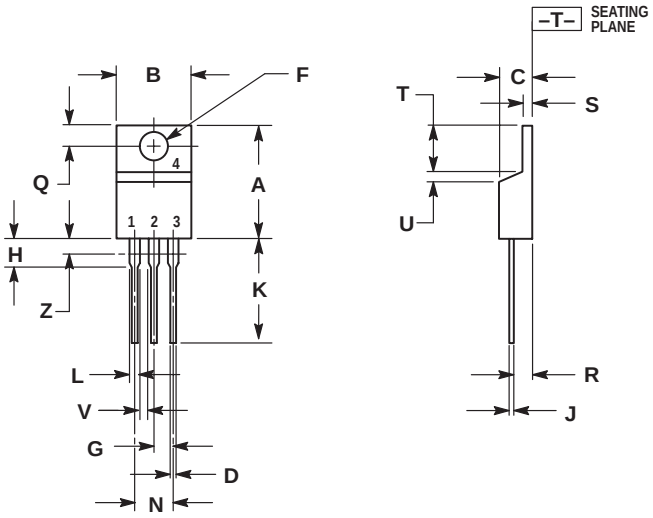

NOTES:
1. DIMENSIONING AND TOLERANCING PER ANSI Y14.5M, 1982.
2. CONTROLLING DIMENSION: INCH.
3. DIMENSION Z DEFINES A ZONE WHERE ALL BODY AND LEAD IRREGULARITIES ARE ALLOWED.

	INCHES		MILLIMETERS	
DIM	MIN	MAX	MIN	MAX
A	0.570	0.620	14.48	15.75
B	0.380	0.405	9.66	10.28
C	0.160	0.190	4.07	4.82
D	0.025	0.035	0.64	0.88
F	0.142	0.147	3.61	3.73
G	0.095	0.105	2.42	2.66
H	0.110	0.155	2.80	3.93
J	0.014	0.022	0.36	0.55
K	0.500	0.562	12.70	14.27
L	0.045	0.060	1.15	1.52
N	0.190	0.210	4.83	5.33
Q	0.100	0.120	2.54	3.04
R	0.080	0.110	2.04	2.79
S	0.045	0.055	1.15	1.39
T	0.235	0.255	5.97	6.47
U	0.000	0.050	0.00	1.27
V	0.045	—	1.15	—
Z	—	0.080	—	2.04

STYLE 4:
PIN 1. MAIN TERMINAL 1
2. MAIN TERMINAL 2
3. GATE
4. MAIN TERMINAL 2

Notes

Notes

ON Semiconductor and are trademarks of Semiconductor Components Industries, LLC (SCILLC). SCILLC reserves the right to make changes without further notice to any products herein. SCILLC makes no warranty, representation or guarantee regarding the suitability of its products for any particular purpose, nor does SCILLC assume any liability arising out of the application or use of any product or circuit, and specifically disclaims any and all liability, including without limitation special, consequential or incidental damages. "Typical" parameters which may be provided in SCILLC data sheets and/or specifications can and do vary in different applications and actual performance may vary over time. All operating parameters, including "Typicals" must be validated for each customer application by customer's technical experts. SCILLC does not convey any license under its patent rights nor the rights of others. SCILLC products are not designed, intended, or authorized for use as components in systems intended for surgical implant into the body, or other applications intended to support or sustain life, or for any other application in which the failure of the SCILLC product could create a situation where personal injury or death may occur. Should Buyer purchase or use SCILLC products for any such unintended or unauthorized application, Buyer shall indemnify and hold SCILLC and its officers, employees, subsidiaries, affiliates, and distributors harmless against all claims, costs, damages, and expenses, and reasonable attorney fees arising out of, directly or indirectly, any claim of personal injury or death associated with such unintended or unauthorized use, even if such claim alleges that SCILLC was negligent regarding the design or manufacture of the part. SCILLC is an Equal Opportunity/Affirmative Action Employer.

PUBLICATION ORDERING INFORMATION

NORTH AMERICA Literature Fulfillment:
Literature Distribution Center for ON Semiconductor
P.O. Box 5163, Denver, Colorado 80217 USA
Phone: 303–675–2175 or 800–344–3860 Toll Free USA/Canada
Fax: 303–675–2176 or 800–344–3867 Toll Free USA/Canada
Email: ONlit@hibbertco.com
Fax Response Line: 303–675–2167 or 800–344–3810 Toll Free USA/Canada

N. American Technical Support: 800–282–9855 Toll Free USA/Canada

EUROPE: LDC for ON Semiconductor – European Support
German Phone: (+1) 303–308–7140 (M–F 1:00pm to 5:00pm Munich Time)
Email: ONlit–german@hibbertco.com
French Phone: (+1) 303–308–7141 (M–F 1:00pm to 5:00pm Toulouse Time)
Email: ONlit–french@hibbertco.com
English Phone: (+1) 303–308–7142 (M–F 12:00pm to 5:00pm UK Time)
Email: ONlit@hibbertco.com

EUROPEAN TOLL–FREE ACCESS*: 00–800–4422–3781
*Available from Germany, France, Italy, England, Ireland

CENTRAL/SOUTH AMERICA:
Spanish Phone: 303–308–7143 (Mon–Fri 8:00am to 5:00pm MST)
Email: ONlit–spanish@hibbertco.com

ASIA/PACIFIC: LDC for ON Semiconductor – Asia Support
Phone: 303–675–2121 (Tue–Fri 9:00am to 1:00pm, Hong Kong Time)
Toll Free from Hong Kong & Singapore:
001–800–4422–3781
Email: ONlit–asia@hibbertco.com

JAPAN: ON Semiconductor, Japan Customer Focus Center
4–32–1 Nishi–Gotanda, Shinagawa–ku, Tokyo, Japan 141–8549
Phone: 81–3–5740–2745
Email: r14525@onsemi.com

ON Semiconductor Website: http://onsemi.com

For additional information, please contact your local Sales Representative.